Note that, for some of the types shown here, order might be unable to be received by the MISUMI Indonesia offices.

Single Axis Actuators LX15 Standard / Cover Type

■For Single Axis Actuator LX Series selections, please use our 2D and 3D CAD data and Technical Calculation Software (free of charge).
http://download.misumi.jp/mol/fa_soft.html

Design / Utility Model Registered

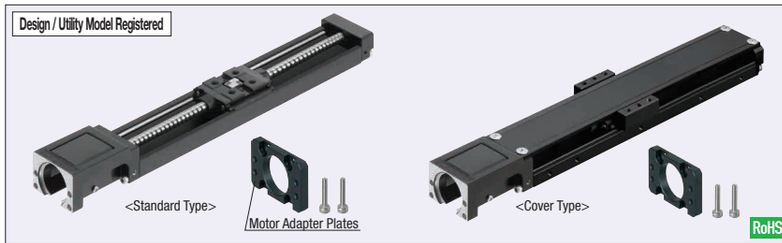

Specifications	
LX15	
Standard / Cover	
Screw Shaft Dia. (mm)	5
Lead (mm)	2
Accuracy	High Grade / Precision Grade

A Accessory
①Motor Adapter Plate
M A5052 S Black Anodize
②Adapter Plate Screw 2 pcs.
M SUSXM7

RoHS10

For Material table, see P.411

Part Number	Standard Grease		Low Dust Generation Grease		Lubrication Unit MX-equipped (Standard Grease)	
	High Grade	Precision Grade	High Grade	Precision Grade	High Grade	Precision Grade
Lead 2	LX1502 (C)	LX1502 (C) P	LX1502 (C) G	LX1502 (C) PG	LX1502 (C) -MX	LX1502 (C) P-MX

(C) is for Cover Type.
Low Dust Generation Grease Information P.414
Lubrication Unit MX Information P.408

Standard Type

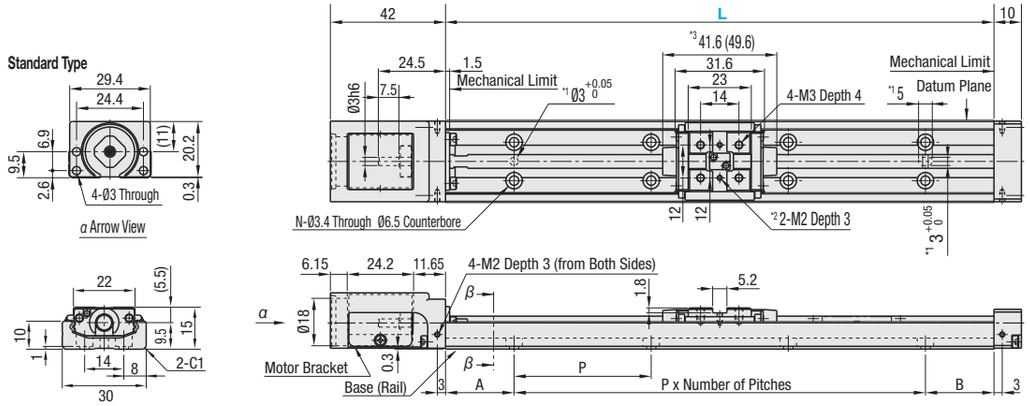

Cover Type

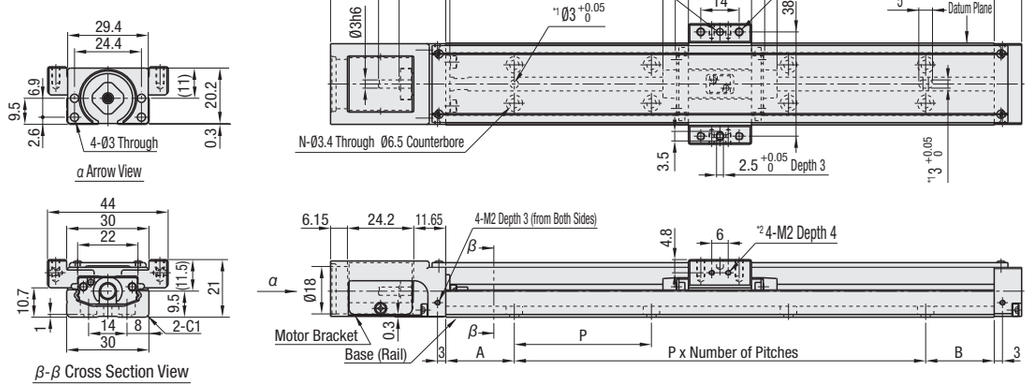

Effective stroke is the value with 2.5mm margin on each side from mechanical limits, i.e., 5mm in total.
Precision specification value is the value achieved after fixing rails. (It is not a value before tightening the rail screws.) For values, see P.413

*1: Dowel Holes for Base Positioning
*2: Tapped Holes for Sensor Flag Mount
*3: Value in ( ) is for Lubrication Unit MX-equipped Type.

Part Number		Block Qty.	Motor Adapter Plates	Base Length (L)	* Effective Stroke		Total Mass (kg)		Mounting Hole Dimensions				
High Grade	* Precision Grade				B1	MX-equipped (B1)	Standard	Cover	A	P	B	Number of Pitches	Number of Holes (N)
(Standard Grease) LX1502 (C) (Low Dust Generation Grease) LX1502 (C) G (Lubrication Unit MX-equipped, Standard Grease) LX1502 (C) -MX	(Standard Grease) LX1502 (C) P (Low Dust Generation Grease) LX1502 (C) PG (Lubrication Unit MX-equipped, Standard Grease) LX1502 (C) P-MX	(1 pc.) B1	(Servo Motor) A1525 A1528 (Stepping Motor) T1528 ST1528 UT1542 ST1542 * (No Adapter Plate) N	75	26.9	-	0.13	0.18	12.5	50	12.5	1	4
				100	51.9	43.9	0.17	0.22	25		25		
				125	76.9	68.9	0.22	0.28	12.5		12.5	2	6
				150	101.9	93.9	0.29	0.35	25		25		
				175	126.9	118.9	0.35	0.41	12.5		12.5	3	8
				200	151.9	143.9	0.38	0.45	25		25		

* Precision Certificate is enclosed with precision grade products.
* (C) is for Cover Type.
* Motor adapter plate and mounting screws are not included with No Adapter Plate Type.
* Effective stroke is indicated in dimensions with a margin of 2.5mm each from the ends.
* 0.002kg will be added to MX-equipped types.

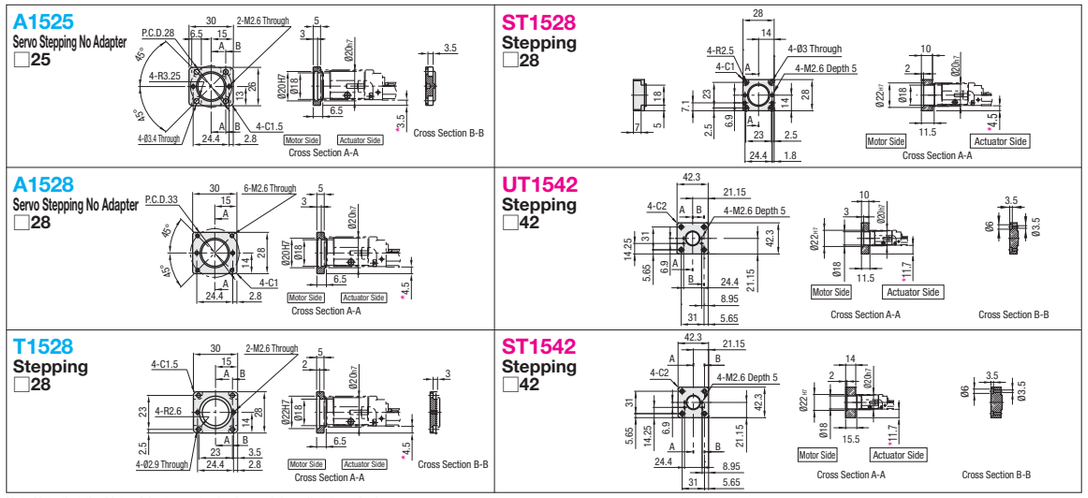

Note:Note that the Motor Adapter protrudes beyond the rail at * marked area.

■Accuracy Standards

Accuracy Standards	High Grade	Precision Grade
Positioning (mm)	0.04	0.02
Backlash (mm)	0.01	0.002
Positioning Repeatability (mm)	±0.004	±0.003
Running Parallelism (mm)	0.02	0.01
Starting Torque (N·cm)	0.8	0.8

For Max. Velocity, see P.413
For Moment of Inertia, see P.412

Ordering Example

Part Number	-	Block Qty.	-	Motor Adapter Plates	-	Base Length (L)
LX1502C-MX	-	B1	-	A1525	-	100

■Servo Motor Application Table

Part Number	Flange Size	Manufacturer	Wattage
A1525	□25	Yasukawa/ Mitsubishi Electric Corporation	10W/20W
A1528	□28	Mitsubishi Electric Corporation	

■Stepping Motor Application Table

Part Number	Flange Size	Manufacturer	Type
T1528	□28	Oriental Motor	5-phase / α-Step
ST1528	□28	NEMA standards	-
UT1542	□42		
ST1542			

NEMA standards are a set of standards stipulated by National Electrical Manufacturers Association of United States.
For details on supported motor types, see P.437
Not compatible with geared motors made by Oriental Motor.

High Grade Unit Price										
Part Number	L=75	L=100	L=125	L=150	L=175	L=200	Motor Adapter Plate	Block Qty.	Screw Shaft Dia.	Lead
LX1502-B1-□							Servo / Stepping No Adapter Plate	1	5	2
LX1502C-B1-□										

■Unit Price for Precision Grade / Low Dust Generation Grease Option / Lubrication Unit MX-equipped

Specifications	Unit Price
Precision Grade	
Low Dust Generation Grease	
Lubrication Unit MX-equipped	

Listed Price + Unit Price = Product Price
Volume Discount Rate is applicable.

Alterations

Part Number	-	Block Qty.	-	Motor Adapter Plates	-	Base Length (L)	-	(Code)
LX1502	-	B1	-	A1525	-	100	-	XW1

■Set of Proximity Sensor (SUNX) - Set Part Specification

LX Part Number	Code (□ is Sensor Qty.) * For L≤100, Max. 2 For L≥125, Max. 3	Sensor Qty. GX-F8A (ON when near)	Sensor Qty. GX-F8B (ON when away)	Sensor Rail Rail (1 pc.)	Sensor Rail Mounting Screw (Pitch +1 pc.)	Sensor (* Qty per Sensor Included) Sensor Mounting Screw (1 pc.)	Sensor Flag (1 pc.)	Sensor Flag Mounting Screw	Unit Price (L≤125) Sensor Qty. 1 pc.	2 pcs.	3 pcs.	Unit Price (L≥150) Sensor Qty. 1 pc.	2 pcs.	3 pcs.
LX1502	XA□	□ pc(s).	-	Dedicated	Phillips Flat Head Screw M2-4 (2 pcs.)	CSST3-10	Dedicated	Pan Head Screw M2-3 (1 pc.)	-			-		
	XB□	-	□ pc(s).											
LX1502C	FA□	□ pc(s).	-					Hex Socket Head Cap Screw M2-4 (2 pcs.)						
	FB□	-	□ pc(s).											
LX1502	XW1	1 pc.	1 pc.					Pan Head Screw M2-3 (1 pc.)		-	-			-
	XW2		2 pcs.						-			-	-	
	XW3	2 pcs.	1 pc.											
LX1502C	FW1	1 pc.	1 pc.					Hex Socket Head Cap Screw M2-4 (2 pcs.)		-	-			-
	FW2		2 pcs.						-			-	-	
	FW3	2 pcs.	1 pc.											

* Sensors are not sold separately.
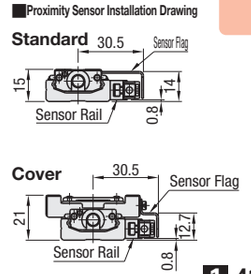
■Proximity Sensor Installation Drawing