Note that, for some of the types shown here, order might be unable to be received by the MISUMI Malaysia, Indonesia and/or India offices.

Mega-Pixel CCTV Lenses / Height Adjustment Screw Set for Post Clamps / Rear Converter / Setscrews

Features: The Mega-Pixel Type with little distortion is also available. This type is equipped with resolution equivalent to those of 1 million-pixel cameras. For selection, see P.2028

Mega-Pixel CCTV Lenses / CCTV Lenses RoHS10

MLCV
LCV

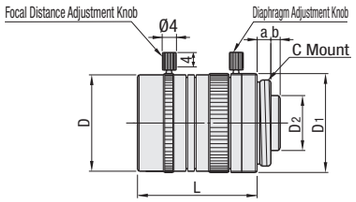

M Material: Aluminum (Body)
S Surface Treatment: Black Anodize (Body)

Mega-Pixel CCTV Lenses

Part Number Type	No.	Focal Distance	Aperture (FNO)	Max. applicable CCD	WD (Shooting Distance) (mm)	TV Distortion	Filter Screw Dia. (MxPitch)	L	D	D1	D2	a	b	Weight g	Unit Price 1 ~ 4 pc(s).	Volume Discount Rate 5 ~ 20 pcs.
MLCV	6	6	1.4~close	1/2 inch	200~∞	-0.96%	30.5x0.5	37.5	32	28.8	21.9	4	2	68		
	8	8	1.4~close	2/3 inch	100~∞	-0.10%	30.5x0.5	28.2	33.5	32	18		0.6	70		
	12	12	1.4~close	2/3 inch	150~∞	-0.10%	30.5x0.5	28.2	33.5	32	18		0.8	65		
	16	16	1.4~close	2/3 inch	300~∞	-0.10%	30.5x0.5	28.2	33.5	32	18		0.9	65		
	25	25	1.4~close	2/3 inch	250~∞	-0.30%	25.5x0.5	31.5	29	28.8	21.5		0.5	45		
	35	35	2.0~close	2/3 inch	250~∞	-0.02%	25.5x0.5	38.5	29	29	-		-	55		
	50	50	2.8~close	2/3 inch	500~∞	-0.20%	25.5x0.5	38.5	29	29	-		-	55		

For orders larger than indicated quantity, please check with WOS.

CCTV Lenses

Part Number Type	No.	Focal Distance	Aperture (FNO)	Max. applicable CCD	WD (Shooting Distance) (mm)	TV Distortion	Filter Screw Dia. (MxPitch)	L	D	D1	D2	a	b	Weight g	Unit Price 1 ~ 4 pc(s).	Volume Discount Rate 5 ~ 20 pcs.
LCV	6	6	1.4~close	1/2 inch	200~∞	-1.60%	27x0.5	30.0	30	29.4	19.5	4	2.6	57		
	8	8	1.3~close	2/3 inch	200~∞	-1.90%	25.5x0.5	34.5	29	29	16		2.7	52		
	12	12	1.4~close	1/2 inch	300~∞	-0.30%	27x0.5	34.5	30	29.4	-		-	56		
	16	16	1.4~close	2/3 inch	400~∞	-0.60%	27x0.5	24.5	30	29.4	16		1.4	40		
	25	25	1.4~close	1 inch	500~∞	-0.60%	27x0.5	24.5	30	29.4	16		1.6	40		
	35	35	1.9~close	2/3 inch	500~∞	0.08%	27x0.5	29.0	30	29.4	16		0.8	50		
	50	50	1.8~close	2/3 inch	1000~∞	0.20%	30.5x0.5	37.0	32	29.4	-		-	55		

Can be used for CCDs other than the most optimal CCD, but four corners of images may be slightly clipped (Vignetting).

For orders larger than indicated quantity, please check with WOS.

Rear Converter RoHS10

LRC (Magnification x2)

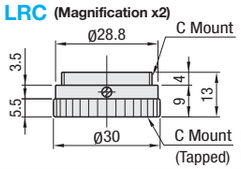

M Material: Aluminum (Body)
S Surface Treatment: Black Anodize (Body)

Part Number	Unit Price 1 ~ 4 pc(s).	Volume Discount Rate 5 ~ 20 pcs.
LRC		

For orders larger than indicated quantity, please check with WOS.

Magnification can be increased without changing the shooting distance by attaching this lens between the lens and CCD camera (Magnification x2).
The field of view becomes narrower (See P.2028 Table 1.)
Use by putting it between the CCD camera and C mounting sides of all the lenses / auto macro rings.

Features: Fits the inch tapped thread on CCD cameras. Can be used to mount the camera on solid objects.

Setscrews RoHS10

LCK

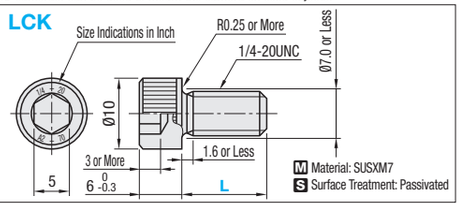

M Material: SUSXM7
S Surface Treatment: Passivated

Part Number Type	L	Unit Price 1 ~ 3 pack(s).	Volume Discount Rate 4 ~ 8 packs.	9 ~ 30 packs.
LCK	8			
	12			

Sold by the package (A package contains 5 pieces)
For orders larger than indicated quantity, please check with WOS.

Caution: The size of hex socket is equivalent to M6. When tightening, use hex wrench for M6.

Features: Mounts below Post Clamps to provide easy manual height adjustments (Max. recommended stroke 5mm). Best suited for camera and sensor position adjustments. Details: P.2170

Height Adjustment Screw Set for Post Clamps RoHS10

Type W/ Double Nuts	W/O Double Nuts	M Material Main Body	Nut	S Surface Treatment	A Accessory
CLAWM	CLAJM	S45C	SUM23	Electroless Nickel Plating	Hex Socket Head Cap Screw (Stainless Steel)
CLAWB	CLAJB	Equivalent	Equivalent	Black Oxide	Hex Socket Head Cap Screw

CB screws for Black Oxide products, SCB for Electroless Nickel Plated products.

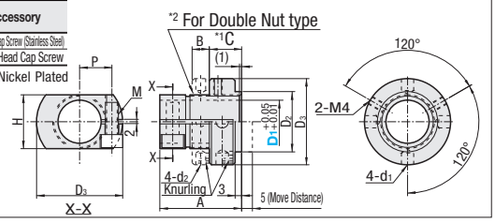

Part Number Type W/ Double Nuts	W/O Double Nuts	D1	A	B	C	H	P	D2	D3	M	d1	d2	Move Distance	Included Screws	Unit Price W/ Double Nuts CLAWM	CLAWB	W/O Double Nuts CLAJM	CLAJB
CLAWM CLAWB	CLAJM CLAJB	10 (+0.05 +0.01)	30	6	11	14	9.5	16	28	4	4.6	3.4	5	M4 - 8, 1pc.				
		12	31		12	16	10	18	30					M4 - 10, 1pc.				
		15	33		13	20	12	22	35	5				M5 - 12, 1pc.				
		20	38	8	15	25	15	28	40	6	5.7	4.6		M6 - 15, 1pc.				
		25	40	8	17	30	17	34	45					M6 - 18, 1pc.				
		30	46		19	36	21	40	55	8	6.8	5.7		M8 - 20, 1pc.				

*1 Shows the nut portion protruding 1mm from the main body.
*2 When "W/O Double Nuts" is selected, double nut is not included.
D1 tolerance is for before the slit machining. Set screw is not included. Recommended tolerances of fitting shafts for D1: g6, f8.

Ordering Example

Part Number
MLCV50
LCV12
LRC
LCK8
CLAJM20

Auto Extension Ring / CCTV Lens / A. E. Ring Mounting Conversion Chart

Auto Extension Ring RoHS10

LCVR

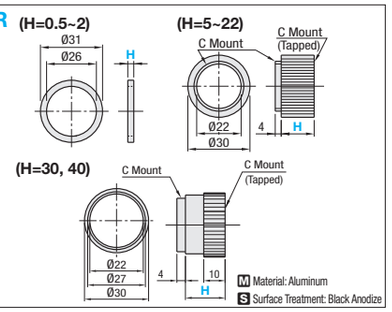

M Material: Aluminum
S Surface Treatment: Black Anodize

Part Number Type	H	Weight (g)	Unit Price 1 ~ 4 pc(s).	Volume Discount Rate 5 ~ 20 pcs.
LCVR	0.5	0.25		
	1	0.5		
	2	1.0		
	5	4.0		
	7.5	6.0		
	10	7.0		
	15	11.5		
	20	15.5		
	22	17.0		
	30	22.5		
	40	30.5		

For orders larger than indicated quantity, please check with WOS.

Use by putting it between the CCD camera and C mounting sides of all the lenses / auto macro rings.
The weight is theoretical value.

Ordering Example

Part Number
LCVR10

Field of View, Magnification and Shooting Distance when Mounting Auto Extension Ring

• Mega-Pixel Lenses (MLCV)

Lens Focal Distance / Auto Extension Ring (mm)	MLCV6 Field of View (Width x Length) 1/2"	1/3"	1/4"	WD (mm)	MLCV8 Field of View (Width x Length) 1/2"	1/3"	1/4"	WD (mm)	MLCV12 Field of View (Width x Length) 1/2"	1/3"	1/4"	WD (mm)	MLCV16 Field of View (Width x Length) 1/2"	1/3"	1/4"	WD (mm)
0	171x229	129x171	96x129	201	66x88	49x66	37x49	102	67x89	50x67	38x50	151	94x125	71x94	53x71	299
0.5	43x58	32x43	24x32	41	36x48	27x36	20x27	51	42x56	32x42	24x32	90	59x78	44x59	33x44	180
	58x77	43x58	33x43	59	80x107	60x80	45x60	126	114x152	86x114	64x86	272	155x206	116x155	87x116	496
1	25x33	18x25	14x18	18	25x33	19x25	14x19	31	31x41	23x31	17x23	62	42x56	32x42	24x32	126
	29x38	22x29	16x22	23	40x53	30x40	23x30	57	58x77	43x58	33x43	128	76x102	57x76	43x57	240
1.5	17x23	13x17	10x13	8	19x25	14x19	11x14	21	24x32	18x24	14x18	46	33x44	25x33	19x25	96
	19x26	14x19	11x14	11	27x35	20x27	15x20	34	38x51	29x38	22x29	80	51x68	38x51	29x38	155
2	13x18	10x13	7x10	3	15x20	12x15	9x12	15	20x27	15x20	11x15	35	27x36	21x27	15x21	76
	14.4x19.2	10.8x14.4	8.1x10.8	5	20x27	15x20	11x15	22	29x38	22x29	16x22	56	38x51	29x38	22x29	112
5	-				-				10x13	7.4x10	5.5x7.4	9	13x18	10x13	7.4x10	29
	-				-				12x15	8.6x12	6.5x8.6	13	15x20	12x15	8.6x12	36
10	-				-				-				7x9	5.3x7	4.0x5.3	9
	-				-				-				8x10	5.8x8	4.3x5.8	10

Lens Focal Distance / Auto Extension Ring (mm)	MLCV25 Field of View (Width x Length) 1/2"	1/3"	1/4"	WD (mm)	MLCV35 Field of View (Width x Length) 1/2"	1/3"	1/4"	WD (mm)	MLCV50 Field of View (Width x Length) 1/2"	1/3"	1/4"	WD (mm)
0	48x63	36x48	27x36	242	32x43	24x32	18x24	244	42x57	32x42	23.9x31.9	499
0.5	40x53	30x40	22x30	201	29x39	22x29	17x22	224	39x52	29x39	22.0x29.3	463
	240x320	180x240	135x180	1235	343x457	257x343	193x257	2445	480x640	360x480	270.0x360.0	5032
1	34x45	26x34	19x26	172	27x36	20x27	15x20	207	36x48	27x36	20.3x27.1	433
	120x160	90x120	68x90	614	166x221	124x166	93x124	1221	240x320	180x240	135.0x180.0	2542
1.5	30x40	22x30	17x22	150	25x33	19x25	14x19	191	34x45	25x34	18.9x25.2	406
	80x107	60x80	45x60	407	112x149	84x112	63x84	813	160x213	120x160	90.0x120.0	1712
2	27x35	20x27	15x20	133	23x31	17x23	13x17	179	31x42	24x31	17.6x23.5	384
	60x80	45x60	40x45	303	84.2x112.3	63.2x84.2	47.4x63.2	609	120x160	90x120	67.5x90.0	1297
5	16x21	12x16	9x12	78	16x22	12x16	9x12	129	23x30	17x23	12.7x16.9	292
	24x32	18x24	13x18	117	33.6x44.8	25.2x33.6	18.9x25.2	242	48x64	36x48	27.0x36.0	550
10	10x13	7x10	5x7	45	11x15	8x11	6x8	90	15x20	11x15	8.6x11.5	216
	12x16	9x12	6.7x9	55	16.8x22.4	12.6x16.8	9.4x12.6	120	24x32	18x24	13.5x18.0	301
15	7x9	5x7	4x5	31	8x11	6x8	5x6	70	12x15	9x12	6.5x8.7	178
	8x10.6	6x8	4.5x6	34	11.2x14.9	8.4x11.2	6.3x8.4	79	16x21	12x16	9.0x12.0	218
20	5x7	4x5	3x4	23	7x9	5x7	4x5	58	9x12	7x9	5.3x7.0	154
	6x8	4.5x6	3.4x4.5	24	8.4x11.2	6.3x8.4	4.7x6.3	59	12x16	9x12	6.7x9.0	176
25	4.3x5.8	3.3x4.3	2.4x3.3	18	6x7	4x6	3x4	50	8x10	6x8	4.4x5.9	139
	4.8x6.4	3.6x4.8	2.7x3.6	18	6.7x9.0	5x6.7	3.8x5.0	46	10x13	7x10	5.4x7.2	151
30	3.7x4.9	2.8x3.7	2.1x2.8	14	4.8x6.4	3.6x4.8	2.7x3.6	44	7x9	5x7	3.8x5.0	127
	4x5.3	3x4	2.2x3	13	5.6x7.5	4.2x5.6	3.1x4.2	38	8x11	6x8	4.5x6.0	136
35	3.2x4.3	2.4x3.2	1.8x2.4	12	4.2x5.6	3.1x4.2	2.3x3.1	40	6x8	4x6	3.3x4.4	119
	3.4x4.6	2.6x3.4	1.9x2.6	10	4.8x6.4	3.6x4.8	2.7x3.6	32	7x9	5x7	3.9x5.1	123
40	-				3.7x5.0	2.8x3.7	2.1x2.8	36	5x7	4x5	3.0x3.9	112
	-				4.2x5.6	3.1x4.2	2.4x3.1	28	6x8	4x6	3.4x4.5	114
45	-				3.3x4.5	2.5x3.3	1.9x2.5	34	5x6	4x5	2.7x3.5	107
	-				3.7x5.0	2.8x3.7	2.1x2.8	25	5x7	4x5	3.0x4.0	107
50	-				3.0x4.1	2.3x3.0	1.7x2.3	31	4x6	3x4	2.4x3.2	102
	-				3.2x4.3	2.4x3.2	1.8x2.4	22	5x6	4x5	2.7x3.6	102

• CCTV Lenses

Lens Focal Distance / Auto Extension Ring (mm)	LCV6 Field of View (Width x Length) 1/2"	1/3"	1/4"	WD (mm)	LCV8 Field of View (Width x Length) 1/2"	1/3"	1/4"	WD (mm)	LCV12 Field of View (Width x Length) 1/2"	1/3"	1/4"	WD (mm)	LCV16 Field of View (Width x Length) 1/2"	1/3"	1/4"	WD (mm)
0	165x221	124x165	93x124	200	96x128	72x96	54x72	148	103x137	77x103	54x77	248	109x145	82x109	66x82	358
0.5	44x58	33x44	25x33	43	43x57	32x43	24x32	59	55x73	41x55	31x41	125	64x86	48x64	36x48	206
	60x79	45x60	34x45	63	77x102	57x77	43x57	115	119x159	89x119	67x89	289	156x208	117x156	88x117	515
1	25x34	19x25	14x19	19	27x37	21x27	15x21	34	38x50	28x38	21x28	80	45x61	34x45	25x34	143
	30x40	22x30	17x22	25	38x51	29x38	21x29	52	59x79	45x59	34x45	136	78x104	58x78	45x58	252
1.5	-				20x27	15x20	11x15	22	29x38	21x29	16x21	57	35x47	26x35	19x26	108
					26x34	19x26	14x19	31	40x53	30x40	23x30	85	52x69	39x52	29x39	164
2	-				-				23x31	17x23	13x17	42	29x38	22x29	16x22	86
									30x40	22x30	17x22	59	39x52	29x39	22x29	120
5	-				-				-				14x18	10x14	7x10	35
													16x21	12x16	9x12	42
10	-				-				-				7.3x9.7	5.4x7.3	4.1x5.4	14
													7.8x10	5.8x7.8	4.3x5.8	15

Lens Focal Distance / Auto Extension Ring (mm)	LCV25 Field of View (Width x Length) 1/2"	1/3"	1/4"	WD (mm)	LCV35 Field of View (Width x Length) 1/2"	1/3"	1/4"	WD (mm)	LCV50 Field of View (Width x Length) 1/2"	1/3"	1/4"	WD (mm)
0	87x115	65x87	49x65	458	66x87	49x66	37x49	500	90x120	68x90	54x68	943
0.5	64x85	48x64	36x48	338	55x73	41x55	31x41	422	-			
	242x322	181x242	136x181	1270	335x447	251x335	193x251	2459				
1	50x67	38x50	27x38	269	47x63	35x47	26x35	366	-			
	121x161	91x121	68x91	637	168x223	126x168	96x126	1240				
1.5	42x56	31x42	24x31	223	41x55	31x41	23x31	324	57x76	43x57	33x43	610
	81x107	60x81	45x60	425	112x149	84x112	64x84	834	154x205	115x154	87x115	1577
2	36x47	27x36	20x27	191	37x49	28x37	21x28	291	51x67	38x51	29x38	548
	60x81	45x60	34x46	320	84x112	63x84	47x63	631	115x154	86x115	66x86	1193
5	19x25	14x19	11x14	103	22x30	17x22	12x17	185	31x41	23x31	17x23	347
	24x32	18x24	14x18	130	34x45	25x34	19x25	265	46x61	35x46	26x35	503
10	11x14	8.0x11	6.0x8.0	60	13x18	10x13	7.5x10	121	18x25	14x18	10x14	226
	12x16	9.1x12	6.8x9.1	66	17x22	13x17	9.3x13	143	23x31	17x23	13x17	273
15	7.4x9.8	5.5x7.4	4.2x5.5	43	9.5x13	7.2x9.5	5.4x7.2	93	13x18	10x13	7.3x10	174
	8.1x11	6.0x8.1	4.5x6.0	45	11x15	8.4x11	6.3x8.4	103	15x21	12x15	8.7x12	196
20	5.6x7.5	4.2x5.6	3.2x4.2	34	7.4x9.9	5.6x7.4	4.2x5.6	78	10x14	7.7x10	5.7x7.7	145
	6.0x8.1	4.5x6.0	3.4x4.5	35	8.4x11	6.3x8.4	4.7x6.3	82	12x15	8.6x12	6.4x8.6	158
25	-				6.1x8.1	4.6x6.1	3.5x4.6	68	8.4x11	6.3x8.4	4.7x6.3	126
					6.7x8.9	5.0x6.7	3.8x5.0	70	9.2x12	6.9x9.2	5.2x6.9	134
30	-				-				7.1x9.4	5.3x7.1	3.9x5.3	113
									7.7x10	5.8x7.7	4.3x5.8	119
35	-				-				6.1x8.2	4.6x6.1	3.5x4.6	104
									6.6x8.8	4.9x6.6	3.7x4.9	108
40	-				-				5.4x7.2	4.1x5.4	3.1x4.1	97
									5.8x7.7	4.3x5.8	2.2x4.3	100