Toggle Clamps
Side Push (Flange Base)

■**Features:** Please select a product suitable in stroke and clamping force. MC07-9 is a lightweight type with a hollow mount base.

1N=0.101972N

■Side Push (Flange Base)

(Clamped)

* Shaft: Nickel Plating

Part Number	MC07-7
Material	Main Body: SS400 / Attaching Portion: FCD450
Surface Treatment	Main Body: * Trivalent Chromate / Attaching Portion: Chemical Conversion Coating
Stroke (mm)	32
Tightening Force (N)	2270
Weight (g)	340
Handle Open-Close Angle	180°
Accessory	Steel Bolt
Unit Price	

MC07-7

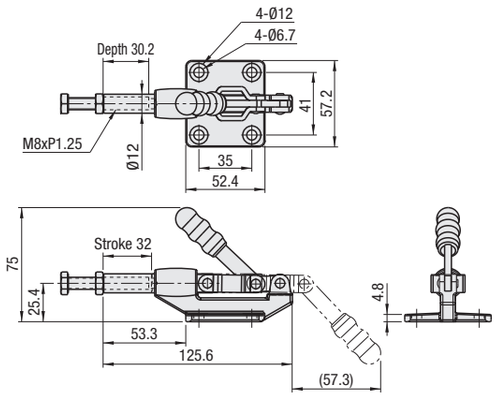

■Side Push (Flange Base)

(Clamped)

* Shaft: Nickel Plating

Part Number	MC07-8
Material	Main Body: SS400 / Attaching Portion: FCD450
Surface Treatment	Main Body: * Trivalent Chromate / Attaching Portion: Chemical Conversion Coating
Stroke (mm)	42
Tightening Force (N)	3860
Weight (g)	580
Handle Open-Close Angle	180°
Accessory	Steel Bolt
Unit Price	

MC07-8

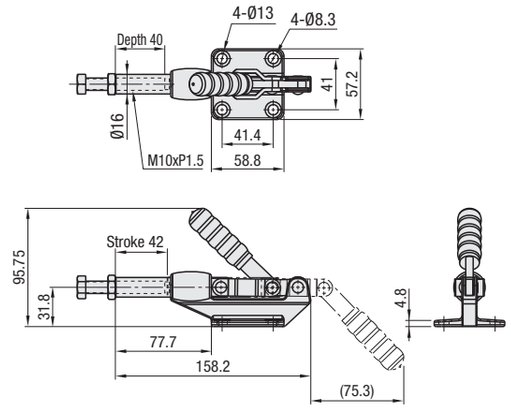

■Side Push (Flange Base)

(Clamped)

* Shaft: Nickel Plating

Part Number	MC07-9
Body Material	SS400
Surface Treatment	* Trivalent Chromate
Stroke (mm)	32
Tightening Force (N)	1360
Weight (g)	300
Handle Open-Close Angle	180°
Accessory	Steel Bolt
Unit Price	

MC07-9

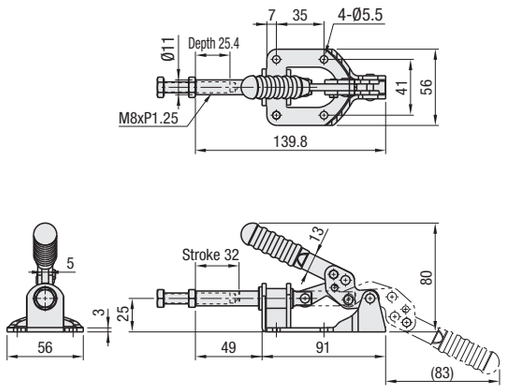

■Side Push (Flange Base)

(Clamped)

* Shaft: Nickel Plating

Part Number	MC07-10
Body Material	SS400
Surface Treatment	* Trivalent Chromate
Stroke (mm)	41.3
Tightening Force (N)	3640
Weight (g)	800
Handle Open-Close Angle	180°
Accessory	Steel Bolt
Unit Price	

MC07-10

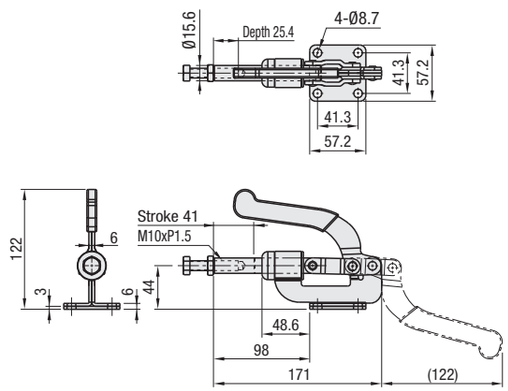

Ordering Example **Part Number** MC07-7

■Features: MC07-11 and MC07-13, each having a shorter vertical base length, require smaller installation space.
■Features: MC07-12, having the same shape as MC07-6 (**P.1810**), is larger in size and clamping force and longer in stroke.

1N=0.101972N

■Side Push (Flange Base)

(Clamped)

* Shaft: Nickel Plating

Part Number	MC07-11
Body Material	SS400
Surface Treatment	* Trivalent Chromate
Stroke (mm)	50.8
Tightening Force (N)	11360
Weight (g)	935
Handle Open-Close Angle	180°
Accessory	Steel Bolt
Unit Price	

MC07-11

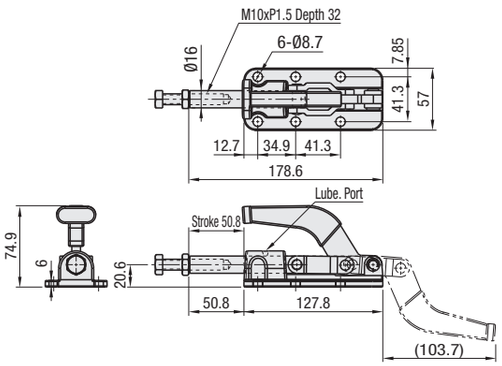

■Side Push (Flange Base)

(Clamped)

* Shaft: Nickel Plating

Part Number	MC07-12
Body Material	SS400
Surface Treatment	* Trivalent Chromate
Stroke (mm)	50.6
Tightening Force (N)	4540
Weight (g)	965
Handle Open-Close Angle	190°
Accessory	Nut
Unit Price	

MC07-12

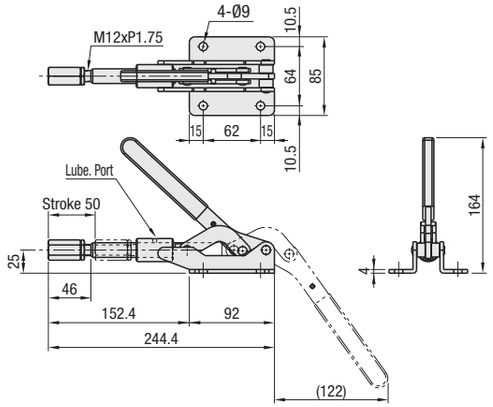

■Side Push (Flange Base)

(Clamped)

* Shaft: Nickel Plating

Part Number	MC07-13
Body Material	SS400
Surface Treatment	* Trivalent Chromate
Stroke (mm)	80
Tightening Force (N)	3000
Weight (g)	1000
Handle Open-Close Angle	180°
Accessory	Steel Bolt
Unit Price	

MC07-13

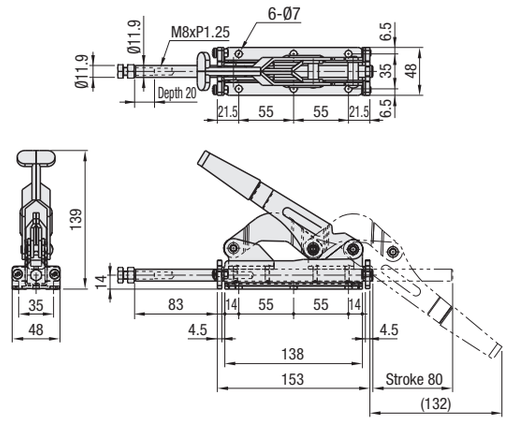

Ordering Example **Part Number** MC07-11
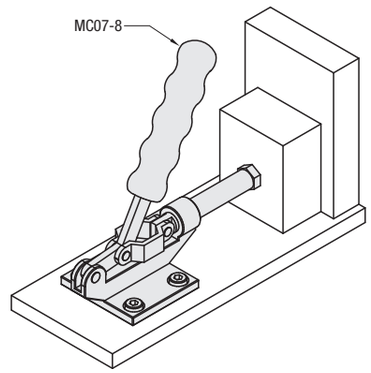
Example